DRAWING:	PS40-01-LV0

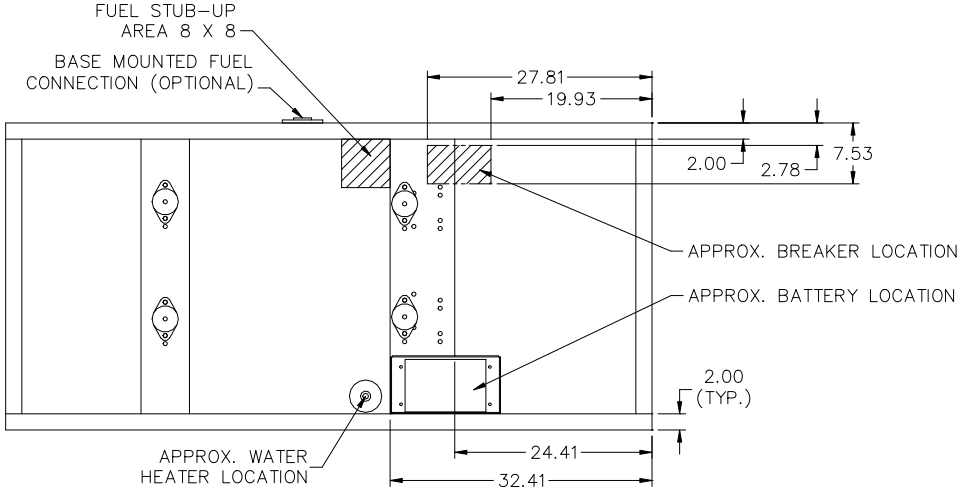

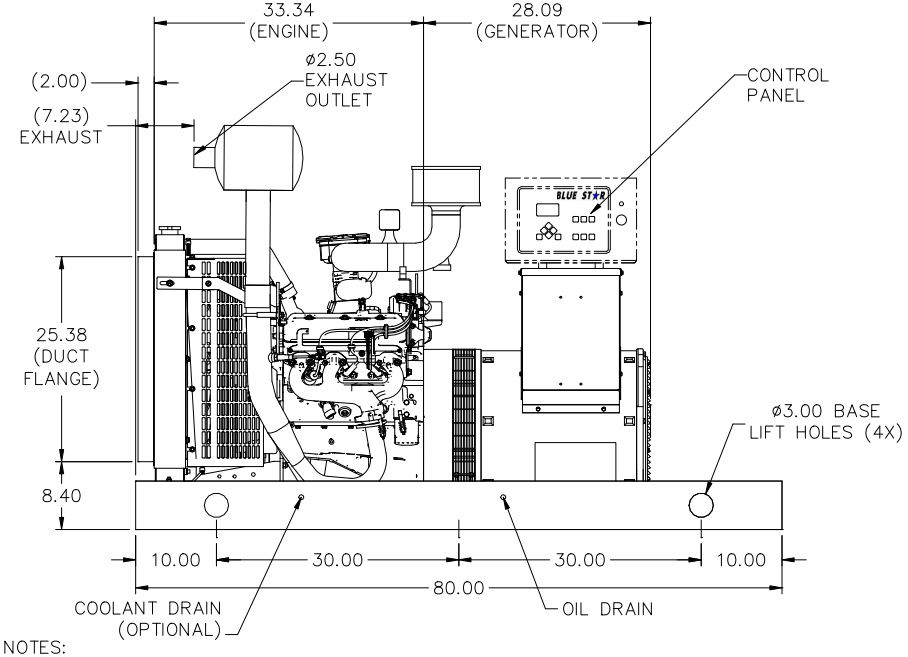

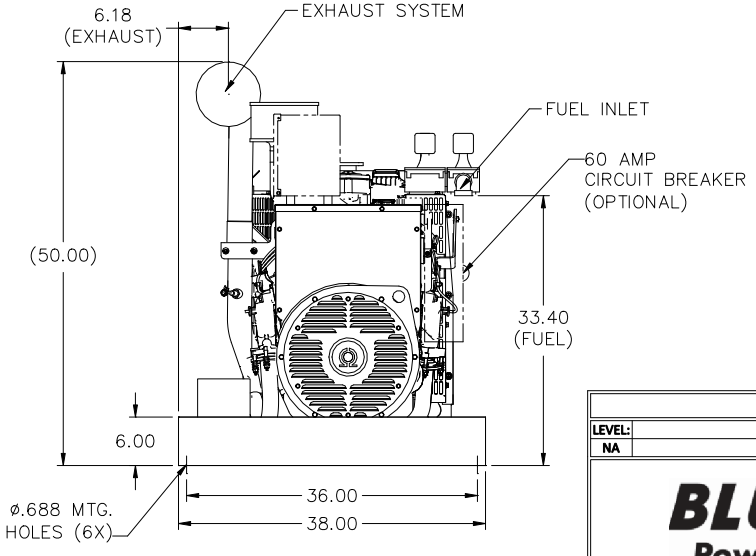

NOTES:
1. UNIT OFFSET 2.00" TO THE RIGHT
2. BREAKER LOCATION IS APPROXIMATE
3. FUEL INLET: 1 NPT
4. RADIATOR CORE WIDTH: 24.00"
5. (XX.XX) DIMENSIONS ARE FOR REFERENCE ONLY

REVISIONS:

LEVEL:	DESCRIPTION:	DATE:	BY:
NA	NA	NA	NA

BLUE STAR Power Systems Inc.

ENG: 4.3L PSI EPA	GEN: 361	
RAD: W/ENG	BASE: 2-0379	HSG: WPE-101
DATE: 06-14-17	BY: KAP	DRAWN TO SCALE